Calipers

SERIES 532 – Vernier Thumbwheel Caliper

- Fine-adjustment thumbwheel aids slider positioning.
- Can measure outside and inside dimensions, depth, and steps.

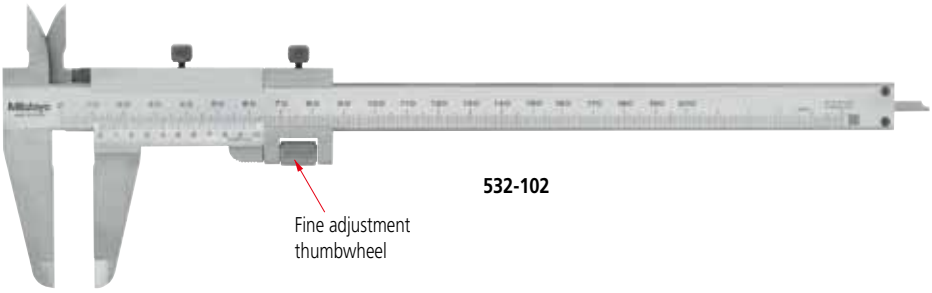

532-102

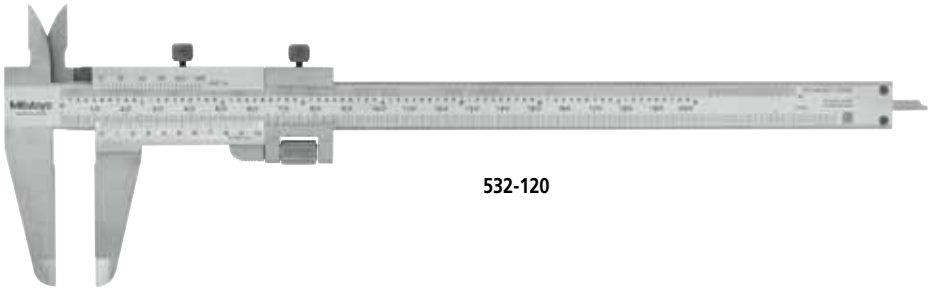

532-120

D

SPECIFICATIONS

Metric

Code No.	Range	Accuracy	Graduation	Price
532-101	0-130 mm	±0.03 mm	0.02 mm	**£60.00**
532-102	0-180 mm			**£80.00**
532-103	0-280 mm	±0.04 mm		**£162.00**

Inch/Metric

Code No.	Range	Accuracy	Graduation	Price
532-119	0-130 mm (0-5")	±0.03 mm	0.02 mm (.001")	**£60.00**
532-120	0-180 mm (0-7")			**£80.00**
532-121	0-280 mm (0-11")	±0.04 mm		**£162.00**

DIMENSIONS

Unit: mm

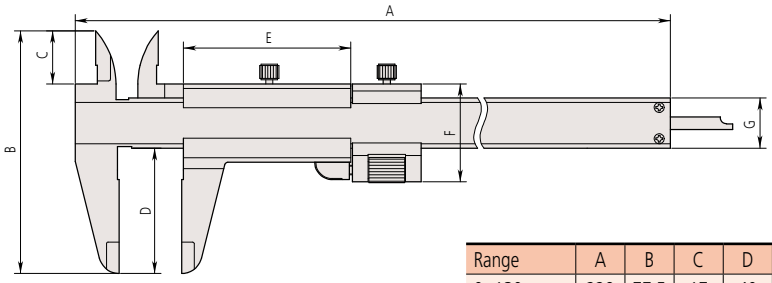

Range	A	B	C	D	E	F	G
0-130 mm	229	77.5	17	40	53.5	31.2	16
0-180 mm	288	91	20.5	50			
0-280 mm	404	111.5	22	64	66.5	38	20

Mitutoyo operates a policy of continuous improvement that aims to provide the customer with the benefit of the latest technological advances.
Therefore the company reserves the right to change any or all aspects of any product specification without notice.

SERIES 531 – Vernier Thumb Clamp Caliper

- The slider moves only when the spring-loaded thumb clamp is depressed.
- Can measure outside and inside dimensions, depth, and steps.

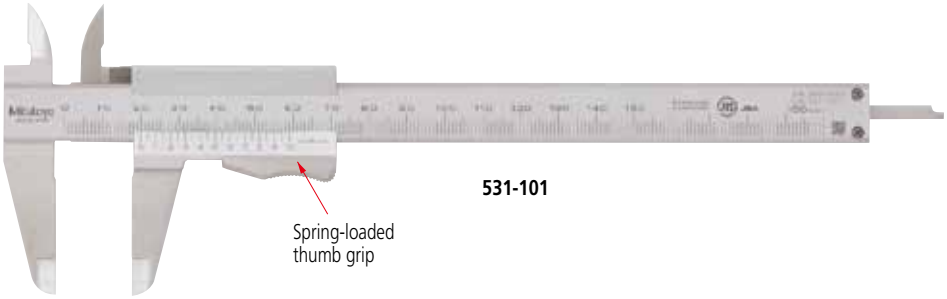

531-101

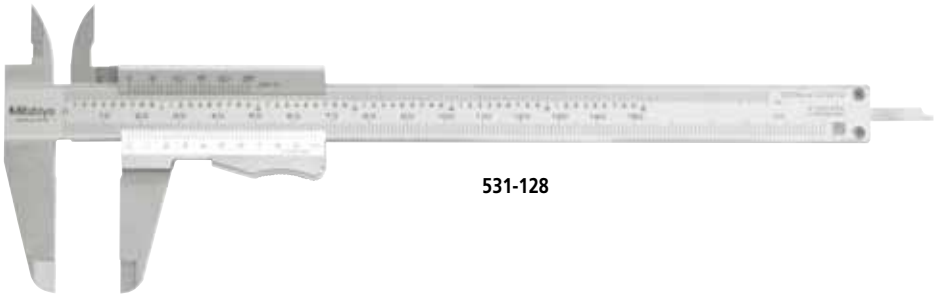

531-128

D

SPECIFICATIONS

Metric

Code No.	Range	Accuracy	Graduation	Remarks	Price
531-101	0-150 mm	±0.05 mm	0.05 mm	—	**£46.60**
531-102	0-200 mm				**£66.50**
531-103	0-300 mm	±0.08 mm			**£162.00**

Inch/Metric

Code No.	Range	Accuracy	Graduation	Remarks	Price
531-128	0-150 mm (0-6")	±0.03 mm	0.02 mm (.001")	High accuracy model	**£41.30**
531-129	0-200 mm (0-8")				**£61.20**
531-112	0-300 mm (0-12")	±0.04 mm			**£158.00**

DIMENSIONS

Unit: mm

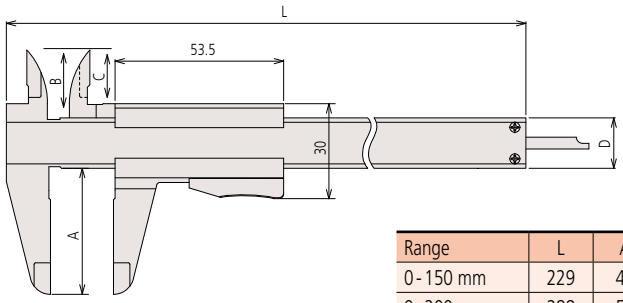

Range	L	A	B	C	D
0-150 mm	229	40	21.5	17	16
0-200 mm	288	50	25	20.5	
0-300 mm	403	64	27.5	22	20

Mitutoyo operates a policy of continuous improvement that aims to provide the customer with the benefit of the latest technological advances.
Therefore the company reserves the right to change any or all aspects of any product specification without notice.

Mitutoyo