ABSOLUTE Digimatic/Dial Depth Gage

SERIES 547, 7

FEATURES

- ABSOLUTE Digimatic Depth Gage keeps track of the origin point (once set) for the entire life of the battery (Series 547).
- Wide probing range is available with the supplied extension rod.
- Bottom surface of the base is hardened, ground and lapped for highest degree of flatness.
- Designed with a back plunger type dial indicator for upward-facing reading. (**7231**, **7237**, **7238**)
- SPC data output (Series 547).

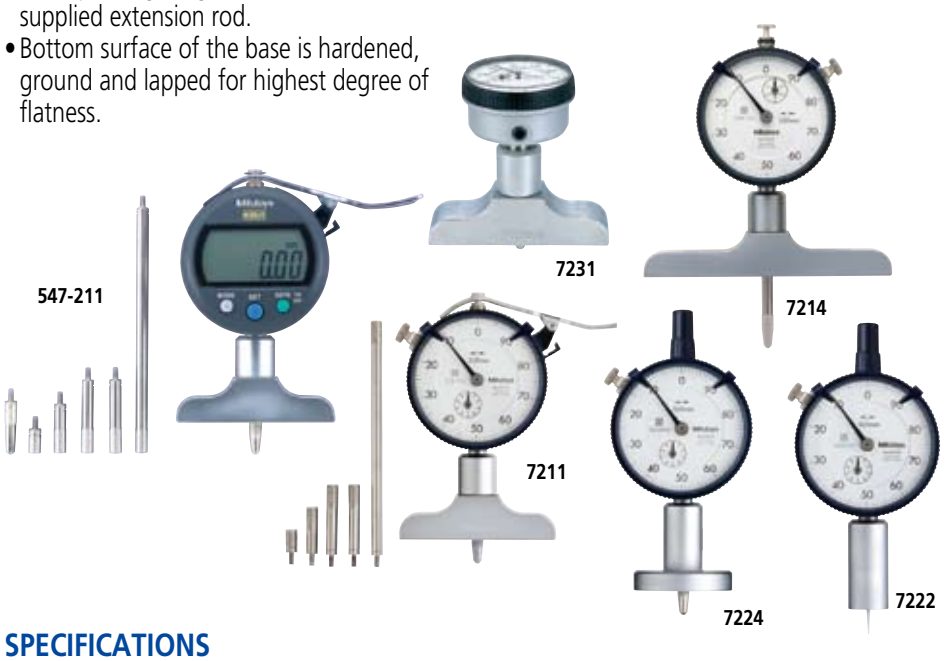

SPC

ABSOLUTE® Absolute System Patented by MITUTOYO

(Refer to page VIII for details.)

Technical Data of Digimatic Model

Accuracy: Refer to the list of specifications. (excluding quantizing error for digital models)

Resolution:

0.01mm type	0.01mm
0.001mm type	0.001mm/0.001mm
.0005"/0.01mm type	.0005"/0.01mm
.00005"/0.001mm type	.0005"/.0001"/.00005"/ 0.01mm/0.001mm

Flatness of base face: 5µm or 2µm
Contact point: Carbide-tipped ball point or needle
Measuring force: 1.5N
Display: LCD
Scale type: ABSOLUTE electrostatic linear encoder
Max. response speed: Unlimited
Battery: SR44 (1 pc.), **938882**
Battery life: Approx. 7,000 hours under normal use

Technical Data of Dial Model

Accuracy: Refer to the list of specifications.
Dial reading: 0.01mm or .001"
Flatness of base face: 5µm or 2µm
Contact point: Carbide-tipped ball point (needle point: **7210**, **7222**)
Measuring force: 1.4N (2.5N: **7213**, **7214**, **7217S**, **7218S**)

Functions of Digital Model

Origin-set/Preset, Zeroset, GO/±NG judgment, Counting direction switching, Power ON/OFF, Simplified calculation, Function lock, Data hold, Data output, inch/mm conversion (inch/mm models)
Alarm: Low voltage, Counting value composition error, Over-flow error, Tolerance limit setting error

Optional Accessories for Digital Model

905338: SPC cable (1m)
905409: SPC cable (2m)
02AZD790F: SPC cable for U-WAVE (160mm)

SPECIFICATIONS

Metric Digital Type

Range	Order No.	Stroke	Accuracy	Extension rod	Base (W x T, flatness)
0 - 200mm	**547-211**	12.7mm	±20µm	5 pcs. (10, 20, 30, 30, 100mm)	63.5 x 16mm, 5µm
0 - 200mm	**547-212**	12.7mm	±20µm	5 pcs. (10, 20, 30, 30, 100mm)	101.6 x 16mm, 5µm
0 - 200mm	**547-251**	12.7mm	±5µm	5 pcs. (10, 20, 30, 30, 100mm)	63.5 x 16mm, 2µm
0 - 200mm	**547-252**	12.7mm	±5µm	5 pcs. (10, 20, 30, 30, 100mm)	101.6 x 16mm, 2µm

0.01mm graduation 0.001mm graduation

Inch/Metric Digital Type

Range	Order No.	Stroke	Accuracy	Extension rod	Base (W x T, flatness)
0 - 8"	**547-217S**	.5"	±.001"	4 pcs. (.5", 1", 2", 4")	2.5" x .63", .0002"
0 - 8"	**547-218S**	.5"	±.001"	4 pcs. (.5", 1", 2", 4")	4" x .63", .0002"
0 - 8"	**547-257S**	.5"	±.0002"	4 pcs. (.5", 1", 2", 4")	2.5" x .63", .00008"
0 - 8"	**547-258S**	.5"	±.0002"	4 pcs. (.5", 1", 2", 4")	4" x .63", .00008"

.0005"/0.01mm graduation .00005"/0.001mm/ graduation

Metric Dial Type

Range	Order No.	Stroke	Accuracy	Extension rod	Base (W x T, flatness)
0 - 10mm	**7210***	10mm	±15µm	—	40 x 16mm, 5µm
0 - 200mm	**7211**	10mm	±15µm	5 pcs. (10, 20, 30, 30, 100mm)	63.5 x 16mm, 5µm
0 - 200mm	**7212**	10mm	±15µm	5 pcs. (10, 20, 30, 30, 100mm)	101.6 x 16mm, 5µm
0 - 210mm	**7213**	30mm	±30µm	3 pcs. (30, 60, 90mm)	63.5 x 16mm, 5µm
0 - 210mm	**7214**	30mm	±30µm	3 pcs. (30, 60, 90mm)	101.6 x 16mm, 5µm
0 - 200mm	**7220**	10mm	±15µm	5 pcs. (10, 20, 30, 30, 100mm)	100 x 18mm, 5µm
0 - 200mm	**7221**	10mm	±15µm	5 pcs. (10, 20, 30, 30, 100mm)	150 x 18mm, 5µm
0 - 10mm	**7222***	10mm	±15µm	—	ø16mm, 5µm
0 - 10mm	**7223**	10mm	±15µm	—	ø25mm, 5µm
0 - 10mm	**7224**	10mm	±15µm	—	ø40mm, 5µm
0 - 200mm	**7231**	5mm	±15µm	5 pcs. (10, 20, 30, 30, 100mm)	63.5 x 16mm, 5µm

*with needle probe

Inch Dial Type

Range	Order No.	Stroke	Accuracy	Extension rod	Base (W x T, flatness)
0 - 8"	**7217S**	1"	±.002"	3 pcs. (1", 2", 4")	2.5" x .63", .0002"
0 - 8"	**7218S**	1"	±.002"	3 pcs. (1", 2", 4")	4" x .63", .0002"
0 - 8"	**7237**	.2"	±.002"	4 pcs. (.5", 1", 2", 4")	2.5" x .63", .0002"
0 - 8"	**7238**	.2"	±.002"	4 pcs. (.5", 1", 2", 4")	4" x .63", .0002"

D

DIMENSIONS

Unit: mm

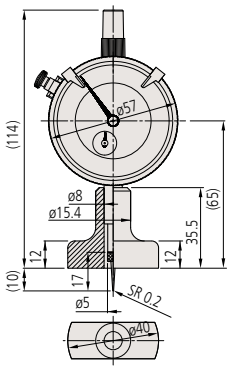

7210

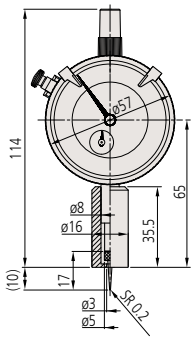

7222

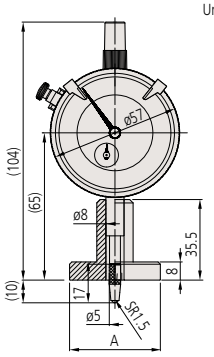

7223 A= ø25mm
7224 A= ø40mm

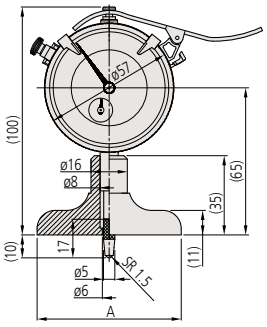

7211 A= 63.5mm
7212 A= 101.6mm

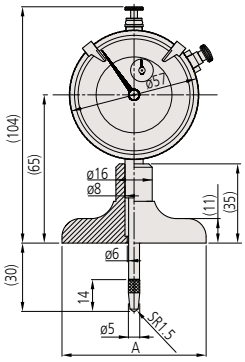

7213, **7217S** A= 63.5mm
7214, **7218S** A= 101.6mm

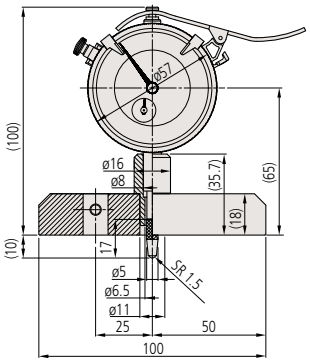

7220

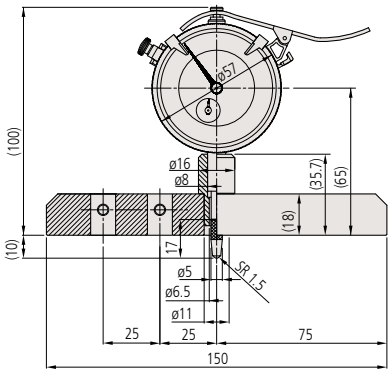

7221

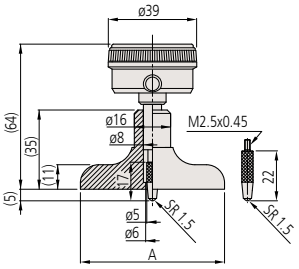

7231, **7237** A= 63.5mm
7238 A= 101.6mm

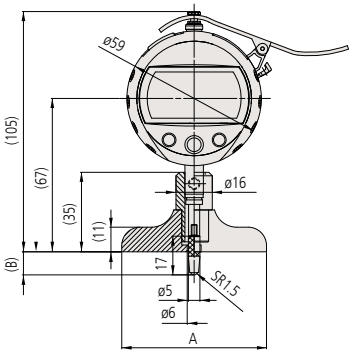

547-211, **547-251**, **547-217S**, **547-257S** A= 63.5mm
547-212, **547-252**, **547-218S**, **547-258S** A= 101.6mm
(**547-211**, **547-212**, **547-251**, **547-252** B= 12mm
547-217S, **547-218S**, **547-257S**, **547-258S** B= 12.9mm)

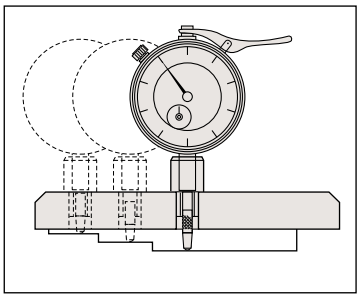

D

Mitutoyo