Digital Universal Protractor

SERIES 187

FEATURES

- Data output function make it easy to see the statistical data.
- Can be attached to height gages. gage holder (950750, metric)
- Setting preset value.
- Removable blade.

187-552

Technical Data

Range:	-360° to +360°
Tolerance:	±2′ (±0.03°)
Repeatability:	1′
Resolution:	1′ (0.01°)
Battery:	Lithium Battery
Battery life:	2,000 hours

Function

Presetting

Standard Accessories

12" Blade (Code No. 187-103)
Battery (CR2032) (Part No. 05SAA217)
Clamp box for Inch Height Gage (Part No. 950749)
Plastic Case

Optional Accessories

187-104	6" blade
187-105	Acute angle attachment
950750	Clamp box for Metric Height Gage
905338	Connecting cable (40" / 1m)
905409	Connecting cable (80" / 2m)

SPECIFICATIONS

Code No.	187-552
Model	BP-D300E
Blade	12″ (187-103)
Display	LCD - 5 digit, (-) sign, character height 6.5mm
Measuring range	-360˚ ~ +360˚
Resolution	1′ (0.01˚)
Accuracy	± 2′ (±0.03˚)
Repeatability	1′ (0.01˚)
Mass	1.45 lbs (659g)
Dust / Water protection level	IP40
Function	Zero, Direction select, Data output / Data hold, Preset, Switchable Seagesimal or Decimal Natation
Max. response speed	3 rps
Battery	Lithium battery (CR2032) 1 pc. (Part No. 05SAA217)
Battery life	2,000 hours
Alarm	Battery voltage low, Over speed error (Err)
Temperature	Operation temperature: 0 to 40˚C Storage temperature: -10 to 60˚C

DIMENSIONS

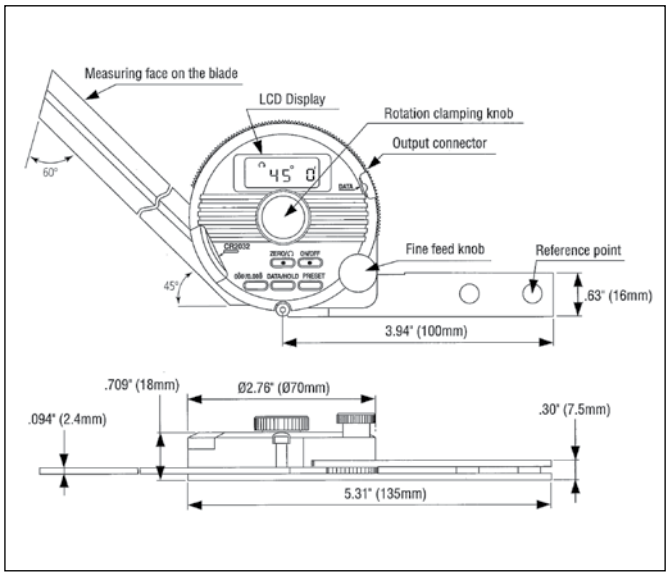

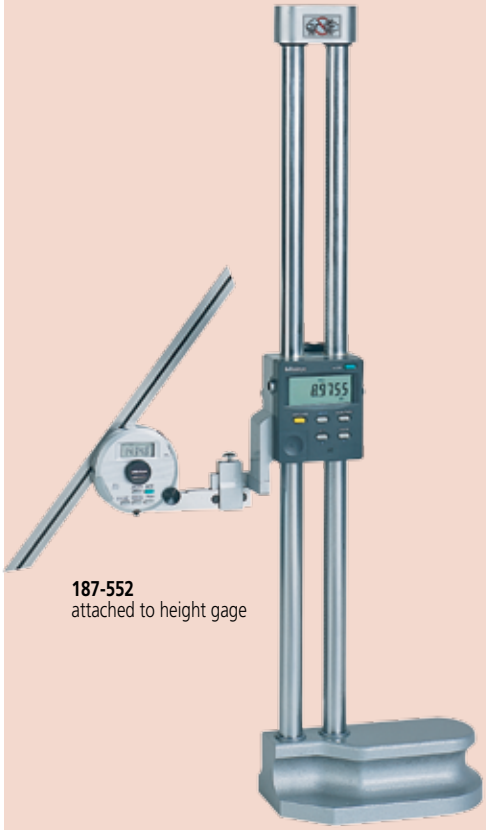

187-552
attached to height gage